Connection Cabinets

FFCC-A2 Series

The FFCC-A2 Series Connection Cabinets offer quick connection to a mobile generator (inlet) or load bank (outlet). They can be penetrated from the back or top to allow for facility wiring. These units are equipped with a manual transfer switch enabling switching to a mobile generator or load bank. Units can also be specified with a rotary disconnect. Units come complete with colour coded camlock receptacles allowing for easy connection. Assemblies are available with up to 1200A mains and are certified to cULus standards.

- **CRS Construction**
- **Type 3R Weatherproof Enclosure**
- **Fully Welded Construction**
- **Wall-Mount Design**
- **Certified to cULus Standards**
- **Manual Transfer Switch or Rotary Disconnect**
- **Dead Front Cover**
- **Colour Coded Camlock Receptacles**
- **Standard Mechanical Lugs Kit**
- **Angled Camlock Plate for Secure Connection**
- **Bottom Cable Access Door**
- **Door c/w 3 Pt. SS Pad-Lockable Handle**
- **Stainless Steel Hinges with Removable Pins**

Max Ratings

- **1200A**
- **600VAC**

Dimensions

- **36"H x 30"W x 16"D (200A & Below)**
- **50"H x 30"W x 16"D (400A)**
- **60"H x 36"W x 24"D (600A & Above)**

Rev 2.0

Foxfab Power Solutions

Head Office: 2579 188 St, Surrey, BC Canada, V3Z 2A1 Toll Free: (877) 468-0305 Email: sales@foxfab.com

FFCC-A2 Series

One-Line Diagram

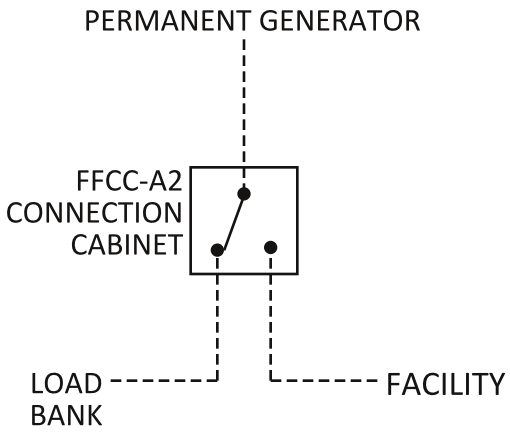

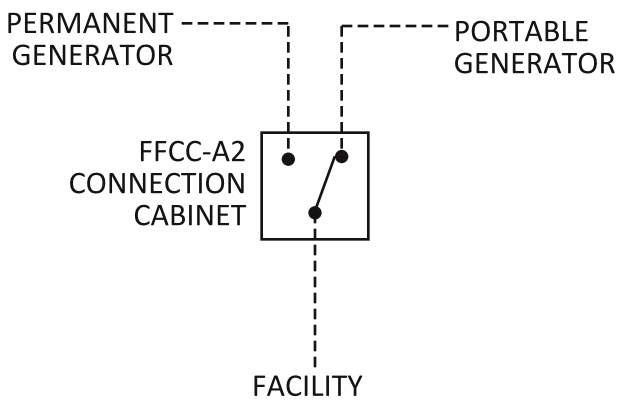

Application Diagram

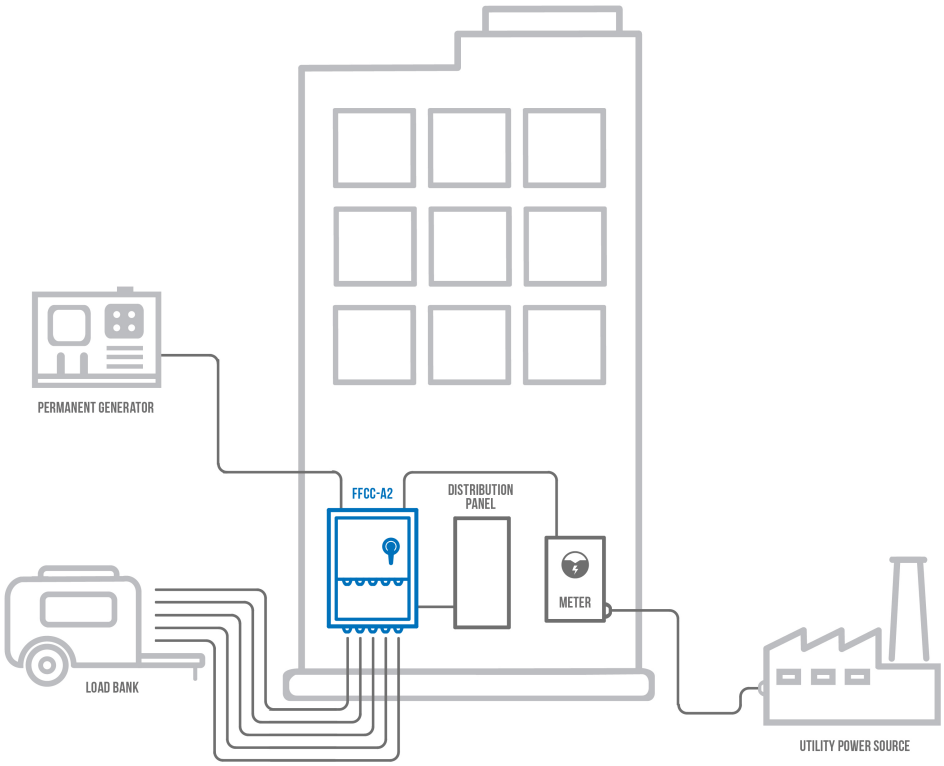

Foxfab Power Solutions
Head Office: 2579 188 St, Surrey, BC Canada, V3Z 2A1 Toll Free: (877) 468-0305 Email: sales@foxfab.com

FFCC-A2 Series

Product Selector

FFCC - A2 - [ ] - [ ] - [ ] - [ ] - [ ] - [ ] - [ ] - [ ] PART NO.

FFCC - A2 - 800 - T - U3 - G - CRS - LA - A25 EX.

AMPS
100
200
400
600
800
1200

TYPE
T = MANUAL TRANSFER SWITCH
D = ROTARY DISCONNECT

CONNECTION
G = PORTABLE GENERATOR (INLET)
L = LOAD BANK (OUTLET)

ENCLOSURE CONSTRUCTION
CRS = COLD ROLLED STEEL

ACCESSORIES
AXX = 400A CAMLOCK CABLE SET (XX = FT)
AA = CAMLOCK SNAP COVERS
AB = CUSTOM POWDER COAT COLOUR
AC = HEATER W/ STAT
AD = GFCI RECEPTACLE
AE = KEY INTERLOCK
AF = TERMINAL STRIP
AG = PHASE SEQUENCE MONITOR
AH = POWER METER
AI = MICRO-SWITCH
AJ = LEG STAND SET
BLANK = NONE

USA						
VOLTAGE	CAMLOCK COLOUR GUIDE					
	A	B	C	N	G	
U1 = 120/240V (1PH + N + G)	BLK	RED		WHT	GRN	
U2 = 240V (3PH + G)	BLK	RED	BLU		GRN	
U3 = 208Y/120V (3PH + N + G)	BLK	RED	BLU	WHT	GRN	
U4 = 480Y/277V (3PH + N + G)	BRN	ORG	YEL	WHT	GRN	
U5 = 480V (3PH + G)	BRN	ORG	YEL		GRN	

CANADA						
VOLTAGE	CAMLOCK COLOUR GUIDE					
	A	B	C	N	G	
C1 = 120/240V (1PH + N + G)	RED	BLK		WHT	GRN	
C2 = 240V (3PH + G)	RED	BLK	BLU		GRN	
C3 = 208Y/120V (3PH + N + G)	RED	BLK	BLU	WHT	GRN	
C4 = 600Y/347V (3PH + N + G)	RED	BLK	BLU	WHT	GRN	
C5 = 600V (3PH + G)	RED	BLK	BLU		GRN	

LUG CONFIGURATIONS (PER POLE)			
AMPS	OPTION LA	OPTION LB	OPTION LC
100A	(1) #6 AWG - 250MCM, (1) #2 GND	(1) #4 AWG - 600MCM, (1) #1/0 GND	(1) 300 - 800 MCM, (1) #2/0 GND
200A	(1) #6 AWG - 250MCM, (1) #2 GND	(1) #4 AWG - 600MCM, (1) #1/0 GND	(1) 300 - 800 MCM, (1) #2/0 GND
400A	(2) #6 AWG - 250MCM, (2) #2 GND	(1) #4 AWG - 600MCM, (1) #1/0 GND	(1) 300 - 800 MCM, (1) #2/0 GND
600A	(2) #6 AWG - 250MCM, (2) #2 GND	(2) #4 AWG - 600MCM, (2) #1/0 GND	(1) 300 - 800 MCM, (1) #2/0 GND
800A	(3) #4 AWG - 600MCM, (3) #1/0 GND	(2) 300 - 800 MCM, (2) #2/0 GND	(2) 500 - 1000 MCM, (2) #2/0 GND
1200A	(4) #4 AWG - 600MCM, (4) #1/0 GND	(3) 300 - 800 MCM, (3) #2/0 GND	(3) 500 - 1000 MCM, (3) #2/0 GND

**FOR CUSTOM LUG SIZES, SPECIFY WHEN PLACING ORDER

Foxfab Power Solutions
Head Office: 2579 188 St, Surrey, BC Canada, V3Z 2A1 Toll Free: (877) 468-0305 Email: sales@foxfab.com